McCULLOCH CORPORATION

SERVICE BULLETIN

1337

MODEL: All

January 29, 1965

SUBJECT: BREAKER POINTS - TIMING

It has been determined by careful study that breaker point adjustment can be upset when the breaker box cover screws are installed. Gasket compression and possibly metal distortion can occur when the screws are tightened down on the cover retaining clips. The effect on breaker point setting can be as much as a 2 degree advance in timing.

This problem may be solved by a slight change in the procedure for adjusting the breaker points. Parts involved in the procedure are the breaker box cover and crankcase cover retaining screws. Adjust breaker points as follows:

1. Remove the screw and cover retainer.
2. Remove the breaker box cover.
3. Loosen the five remaining crankcase cover screws but do not remove.
4. Install the screw removed in step 1.
5. Tighten all six screws equally to the correct torque value of 60 to 65 inch-pounds (0.069 to 0.075 mkg).
6. Adjust breaker points to the proper setting.
7. Remove the screw installed in step 4, reinstall the breaker box cover and cover retainer.
8. Reinstall the retainer screw and tighten to the correct torque value (same as in step 5 above).

Follow the same procedure when adjusting breaker points on saws which have the breaker box cover secured by two clips and four retaining screws. In all cases, breaker points should be adjusted for a condition in which all crankcase cover screws are tightened equally to the correct torque value.

McCULLOCH CORPORATION

Cecil Benton
Service Manager

LITHO IN U.S.A.

McCULLOCH CORPORATION

SERVICE BULLETIN

1294

Model: All

July 8, 1964

Subject: TIMING

Careful and accurate ignition timing is essential for top performance of the modern, high-precision engine, whether it be a chain saw, kart, or automotive engine. Although most engines will run, and many of them do, even when timed by eye, by guess or by obsolete methods, they will not perform with the power and speed of the properly timed engine.

It is very important therefore, that the chain saw or kart engine be accurately timed if maximum power or speed is desired, and the best way to time any engine is with the use of a degree wheel and a timing light. A degree wheel can be made at low cost, as explained in this bulletin, or obtained from a supplier furnishing these aids on order.

One such source is -- Dick's Louver Shop
560 Basket Road, Webster, New York, 14580

The above supplier furnishes a degree wheel kit listed as the C.A.L. Ignition Timer, which includes the following parts:

- Degree Wheel
- Crankshaft Adapter, 7/16-20 R.H. thread (L.H. thread adapter available for $1.00)
- Long Pointer
- Short Pointer
- Piston Stop
- Timing Light (less batteries)
- Instructions

The price of the kit is $4.95 plus 35¢ postage. A 30% discount is allowed on orders for 3 or more kits. Postage will be paid if the order is accompanied by check.

A degree wheel can also be made with parts and preparation as follows:

1-- Special extension nut (P/N 19521)
1-- Special bolt 3/8-24 x 2-inch (50.8 mm) long (P/N 101535)
1-- Nut 10-24 (P/N 101326)
1-- Round head screw 10-24 x 7/8-inch (22.225 mm) long (P/N 101992)
1-- Wave washer (P/N 106183)
3-- Plain washers (P/N 100002)

LITHO IN U.S.A.

In addition, you will need a 180 degree protractor (5 or 6-inch diameter) which is obtainable from a stationery or 5 and 10 cent store.

NOTE: Make sure the protractor has center lines similar to those shown in Figure 1.

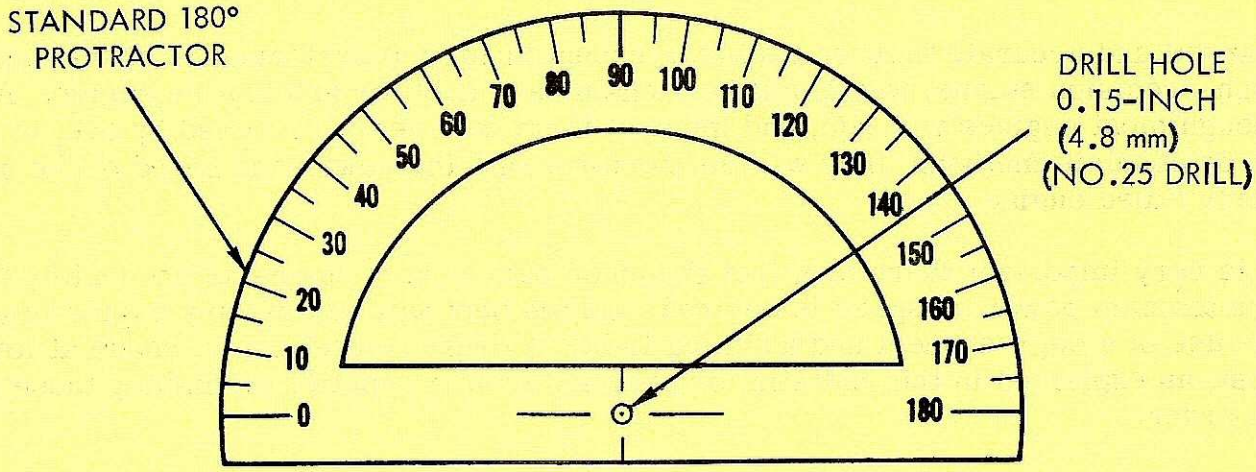

FIGURE 1

1. Drill a 0.15-inch (4.8 mm) hole through the center lines on the protractor, using a No. 25 drill. If desired, a thin piece of aluminum can be added to the back of the protractor to reduce its flexibility. Cut the aluminum in the same shape as the protractor and, using Pli-O-Bond or a similar sealant, mount the aluminum plate to the back of the protractor.

2. Install the round head screw in the special extension nut and jam the screw tight. Assemble the protractor on the nut and screw, and secure with the three plain washers, wave washer, and nut (Figure 2).

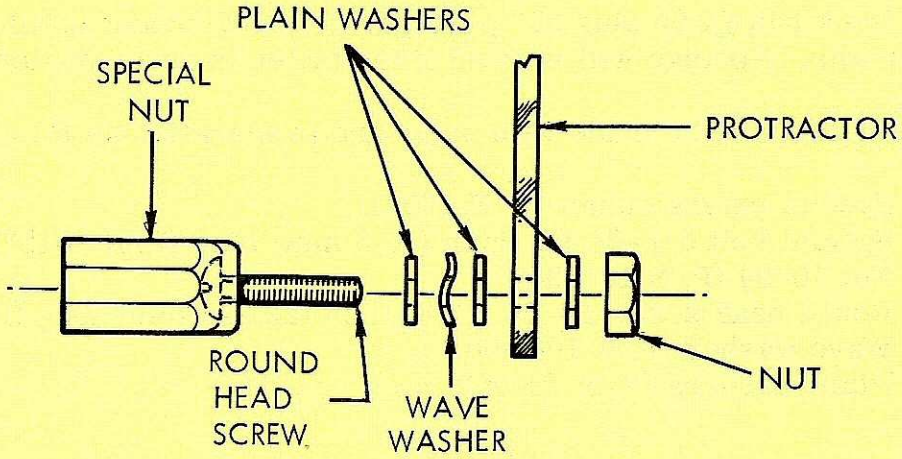

FIGURE 2

3. Remove the porcelain and the ground electrode from an old spark plug and drill and tap a 3/8-inch (9.525 mm) thread through the spark plug shell (Figure 3). Thread the special bolt into the spark plug shell. Use a grinder or file to round off the bolt end to be sure there are no sharp edges or burrs which could damage the piston. As a compression relief, it is recommended that a 1/8-inch (3.175mm) hole be drilled through the bolt. This assembly is your piston stop.

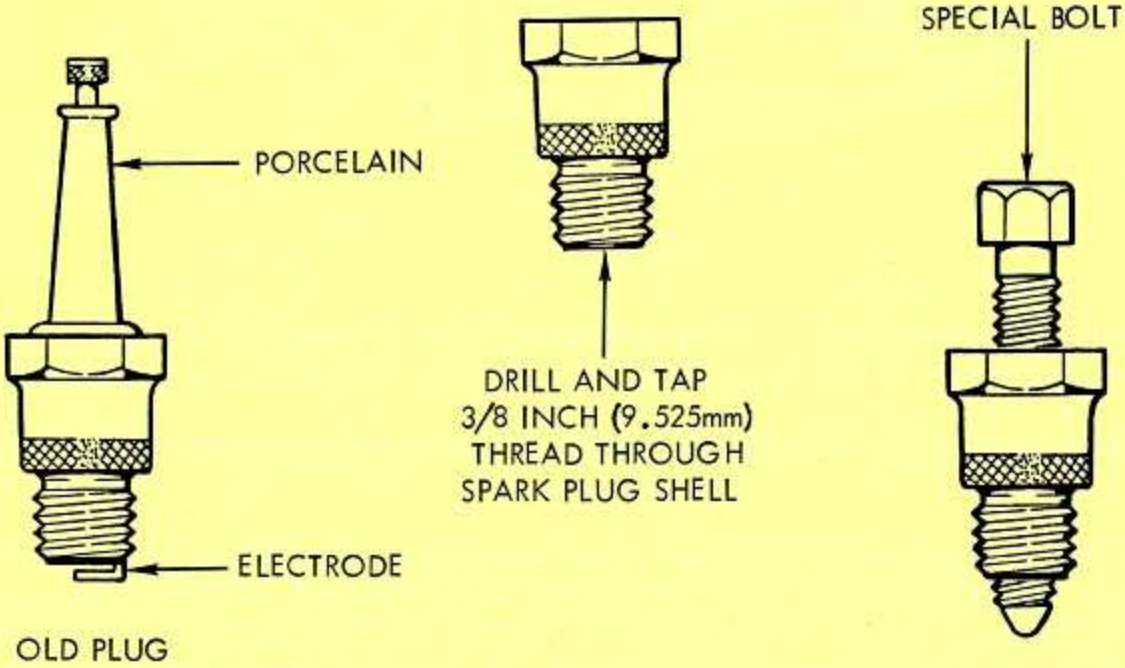

FIGURE 3

4. Remove the fan housing, flywheel, and breaker box cover from the engine. Install the degree wheel (protractor assembly) on the flywheel end of the crankshaft and tighten the special nut finger tight. (Figure 4.)

5. Make a simple indicator for the degree wheel from any thin metal strip (Figure 4). Mount the indicator on one coil lamination post or on the crankcase cover, whichever is most convenient for the size of the protractor being used. Just be sure that the indicator is close to and points directly at the protractor scale.

NOTE: Timing may be checked (but not adjusted) without removing the flywheel. For this purpose it will be convenient to make a second and longer indicator suitable for the higher position of the protractor.

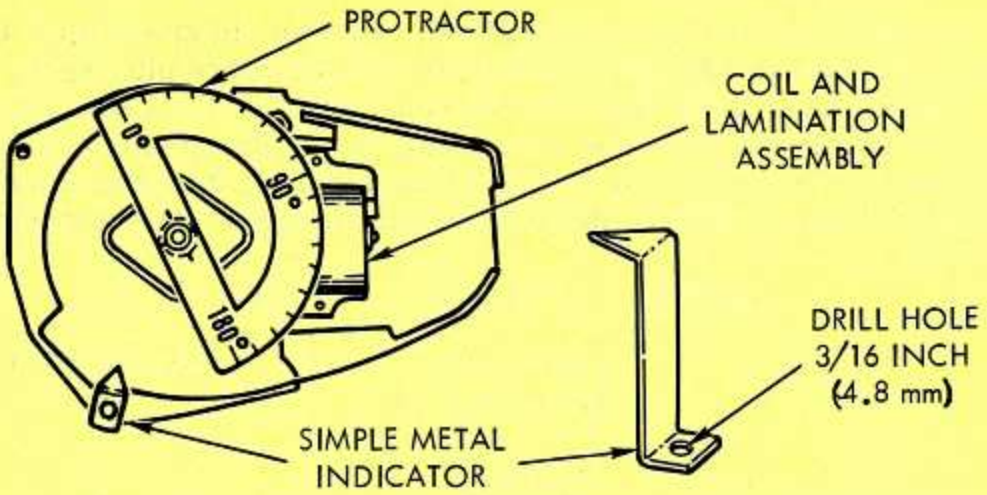

FIGURE 4

6. Remove the spark plug from the engine and install the piston stop (the special spark plug shell) in the spark plug hole. Tighten the piston stop finger tight.

7. Turn the piston stop bolt all the way through the shell and into the cylinder bore.

When the piston stop bolt is installed in the spark plug hole, it will prevent the piston from coming up to top dead center and the crankshaft from making a complete revolution. Top dead center must be exactly one half the untraveled distance between stops, and we have only to measure this distance or any intermediate point to establish breaker point timing.

The degree wheel provides an accurate reference point for this measurement and is used as follows:

1. Turn the crankshaft clockwise until the piston hits the piston stop (Figure 5).

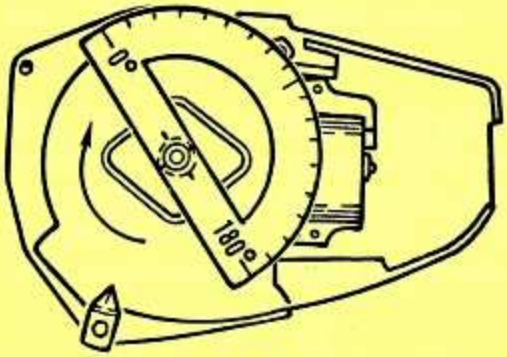

FIGURE 5

2. Turn the degree wheel until the indicator points to the 180 degree mark (Figure 6).

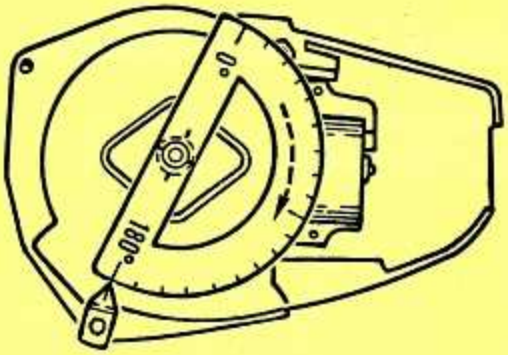

FIGURE 6

3. Turn the crankshaft and degree wheel counterclockwise until the piston again hits the piston stop. Note the second reading on the degree wheel and subtract it from 180. One half the difference will be top dead center on the degree wheel.

For example, we assume a reading of 110 degrees at the second stop. (Figure 7.) The untraveled distance between stops is therefore 70 degrees (180-110=70 degrees). Since top dead center is one half this distance or 35 degrees, top dead center on the degree wheel will be at the 145 degree mark (110+35=145 degrees).

4. Remove the piston stop bolt from the spark plug hole.

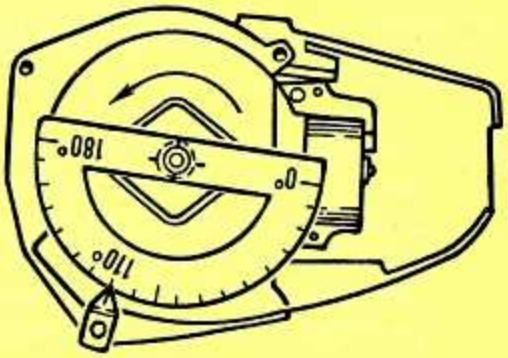

FIGURE 7

5. Turn the crankshaft and the degree wheel counterclockwise until the indicator reads top dead center (145 degrees in the example above). The piston is now at top dead center (Figure 8).

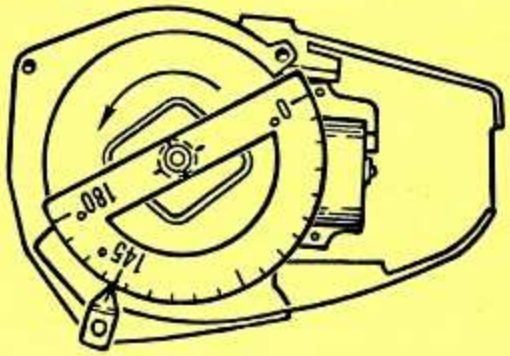

FIGURE 8

6. Turn the crankshaft and the degree wheel clockwise until the indicator reads 26 degrees before top dead center (119 degrees in the example) and the point at which the breaker points should open (Figure 9).

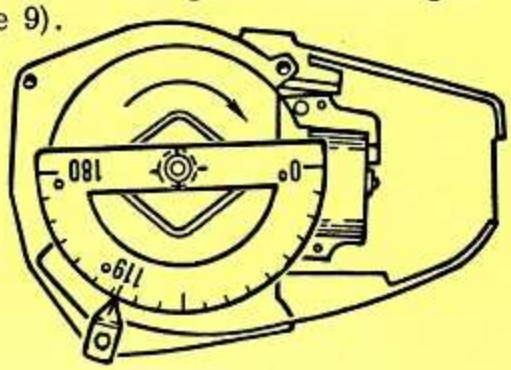

FIGURE 9

7. Disconnect the breaker point lead from the top of the coil. Don't disconnect any other leads.

8. Connect one timing light lead to the breaker point lead and the other lead to the engine.

9. Gently rock the crankshaft to see if the timing light goes on and off. If the timing light goes on and off at the 26 degree BTDC position, the breaker point setting is correct. If the light does not flash on and off, loosen the breaker point screw and adjust the gap setting until the light does flash on and off as the crankshaft is gently rocked. Lock the breaker point assembly in this position without disturbing the setting.

10. Remove the degree wheel assembly and disconnect the timing light leads. Connect the breaker lead to the coil and reinstall the breaker box cover, flywheel, fan housing, and spark plug.

McCULLOCH CORPORATION

Cecil Benton
Service Manager